NOVA XL

The twin sister to our Eclipse XL

The Nova XL offers all of the space and features of the Eclipse XL, but mirrored in order to accommodate various room layouts.

We know that not every sewing space is the same, so we've developed these cabinets to better suit your needs no matter how your room is laid out.

This cabinet features the same refreshed removable door bin design, flush mounted hinges and lockable door as the Eclipse XL.

NOVA XL

Have a visitor, and need to tidy away quickly? Both the Eclipse XL & Nova XL can be folded down in seconds, even with projects partially finished. Once locked with the key you're left with a compact, attractive cabinet. No one would ever know how much it holds.

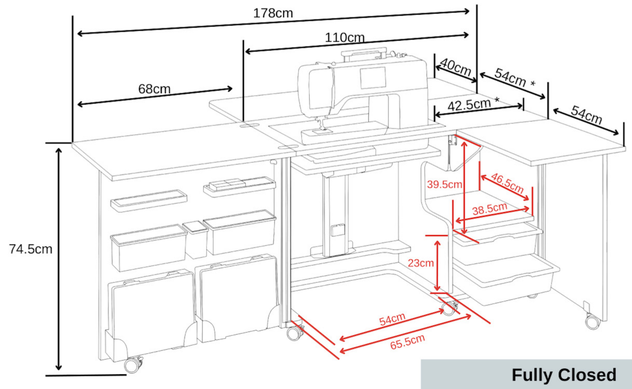

* 56cm with back flap in down position

Fully Closed
W 110cm (43 ¼")
D 56cm (22" - Including drop leaf flap down)
H 76cm (30")

Both units give expansive storage with 33 spool holders, large removable door storage & extra drawers for accessories.

Need a chair? See pg.38-39 for more information

Available in:

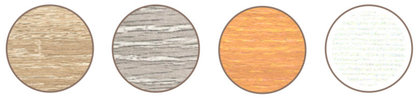

Weathered Oak | American Grey Oak | Beech | White

Delivered fully assembled

"Having dreamed of owning Horn furniture for years, I can say the reality lives up to the anticipation."

HORN CUSTOMER

For more delivery info please see pg.43 for details.